LIGHTWING
AIRCRAFT

LightWing AG,
Riedenmatt 1, CH-6370 Stans
Fon +41 41 611 05 85
info@lightwing.ch, lightwing.ch

The Glider Tow plane

High up with power

Handling on the ground

Robust and durable

- Robust, maintenance-free swingarms with large 6 inch wheels for unpaved grass slopes
- High Performance Brakes with handbrake handle = no runway excursions
- Space-saving in the hangar
- Easy maneuvering and hangaring
- Large Propeller Clearance
- No shock absorbers to pump
- Excellent steerability on the ground
- Effective wheel brakes

Handling in the air

Safe and strong

- Good climbing performance even when fully loaded, a real 2 seater with a reasonable payload
- Simple and logical arrangement of instruments and switches
- Stable, very good flight characteristics
- Fine balances rudder tuning
- Balanced rudder effect around all axes
- Avionics equipment to relieve workload

- V_Y at 120km/h (best rate of climb speed) expected
- High V_{FE} (max flaps extend) of 165km/h,
- Low V_{SO} (Stall Speed) of 76km/h

Safety

Comfortable and spacious

- Heavy-duty, ergonomic carbon seats
- No injury from stick or control horn in the event of a crash
- In case of rollover, leave the cabin via the doors
- Less cockpit heating, less fatigue
- Little direct sunlight
- Crash-proof, one-piece carbon tank
- Good situation Awarness thanks to FLARM in Dynon
- Winter-proof cabin with effective heating
- Large skylight

New generation

Easy going

- Glass cockpit, electronic injection and ignition
- All controls are ergonomically arranged and easily accessible
- Advantages in the areas of safety, comfort and efficiency
- Significantly lower workload
- Carburettor preheating is unnecessary
- The fuel/air mixture is controlled fully automatically
- The propeller pitch is controlled fully automatically

Easy to operate

Clearly arranged and connected

- Dynon SkyView
- Clever details with excellent ease of use
- Wireless Connectivity
- Onboard Camera for highly situational awareness
- Altimeter in ft and Meter

Solid craftsmanship

Quality Swiss made

- Robust, high-quality workmanship
- Maintenance-friendly accessibility
- Swiss Quality Panel Processing

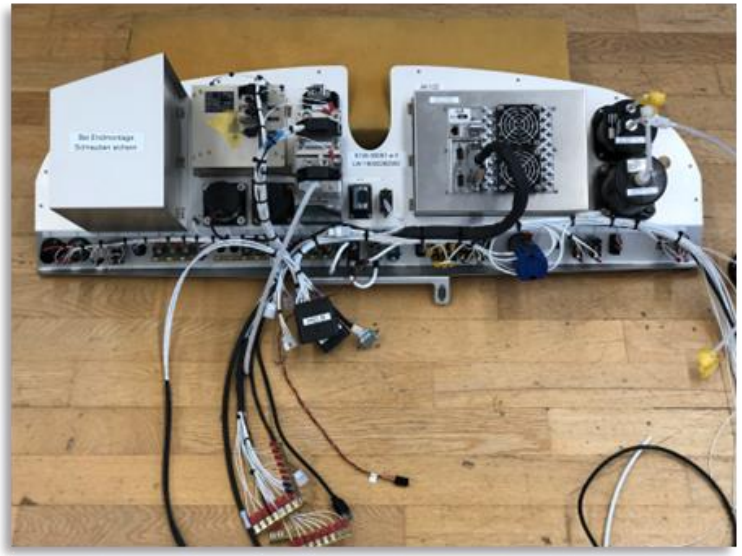

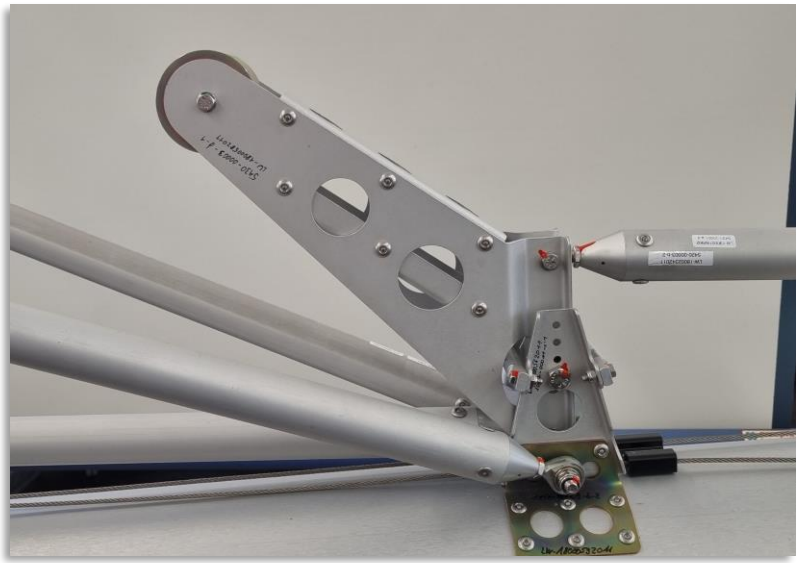

Resident-friendly

Quiet and environmentally friendly

- Pleasant, resident-friendly engine noise
- up to 50 % reduction in consumption
- Lower operating costs
- Use of lower cost UL91 fuel

AC4 is…

Safe, quiet, economical, modern and robust

- Excellent flight characteristics
- Safe and easy to fly
- Spin resistant
- Ecological and quiet
- Low consumption, low operating costs
- Equipped with state-of-the-art technology
- Comfortable cabin with 1.26m width
- Large luggage compartment
- High payload
- Robust construction

Safe towing

with power upwards

- High power reserves thanks to turbochargers, even at high altitudes
- Towing also possible by less experienced pilots
- Simple flight characteristics

Powerful towing

With a cool head

- Turbo Rotax 915 iSC
- MT Propeller with fully automatic control
- Cooling optimized for towing operation
- **2 Oil coolers** with thermostatic control
- **2 Water cooler** with thermostatic control
- Turbocharger and intercooler
- Top performance in towing operation

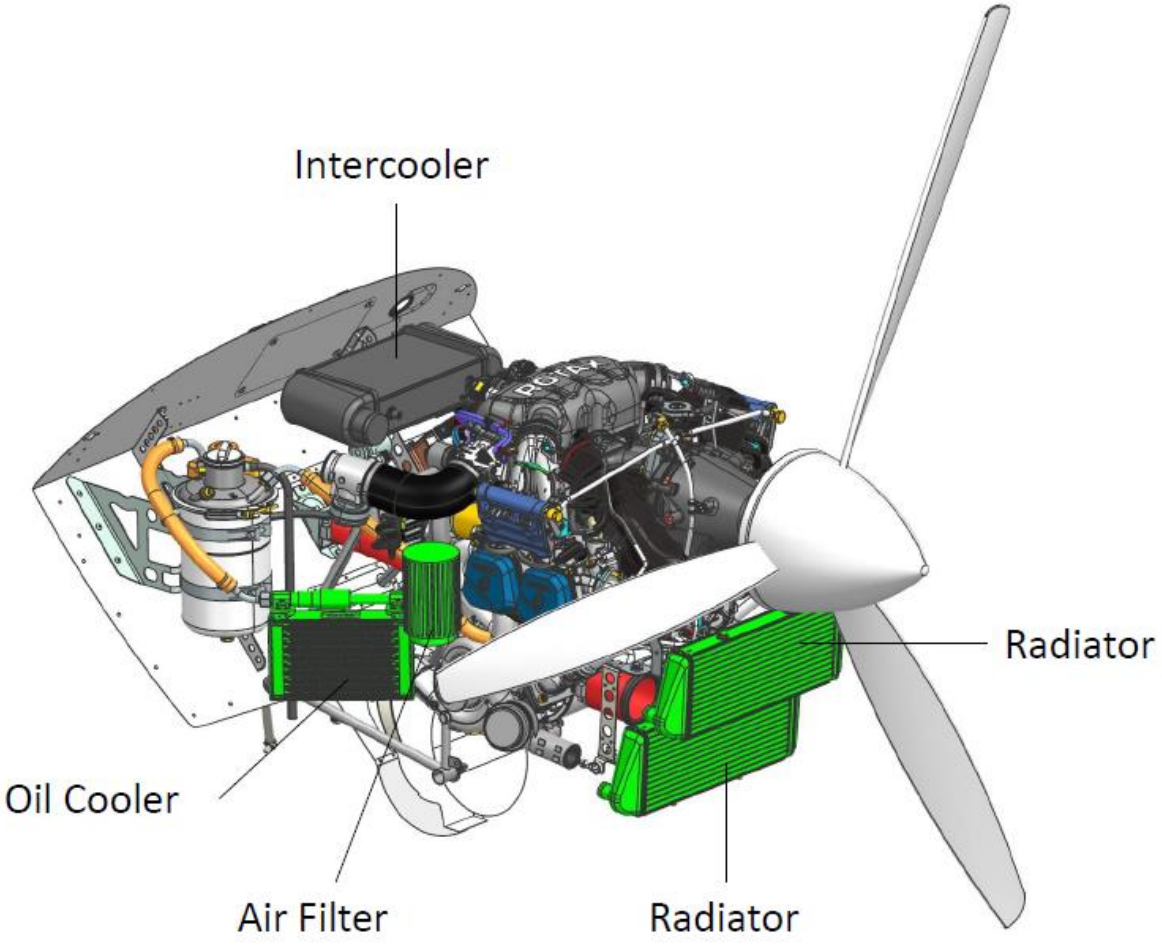

Engine Management System

Electronic

Stock EMU 912 iS

- Engine Management Unit
- All engine data can be called up
- Everything important at a glance
- Blackbox-Function

Glider Tow plane

AC4 GT high up with power

- Simple flight characteristics, Towing also possible by less experienced pilots.
- High power reserves thanks to turbocharger, even at high altitudes
- Towing load up to 850kg

- Excellent forward visibility in tow climb
- Rear-facing camera for best overview when towing

- Less rope sag thanks to better acceleration. Positive for gliding students
- Stable tow train, low downwash

Glider Tow plane

AC4 GT high up with power

- towing normally at 100 – 120km/h, for long tows at 145km/h
- Classic glider towing possible at optimum speed

- Steep approach without massive speed acceleration is possible (no shock cooling)
- Fast speed reduction in final approach

- Big wheels, Large ground clearance of the propeller for towing at unpaved slopes
- Large rear ground distance for towing cone protection
- Gentle introduction of drag forces into the cell

Rope installation

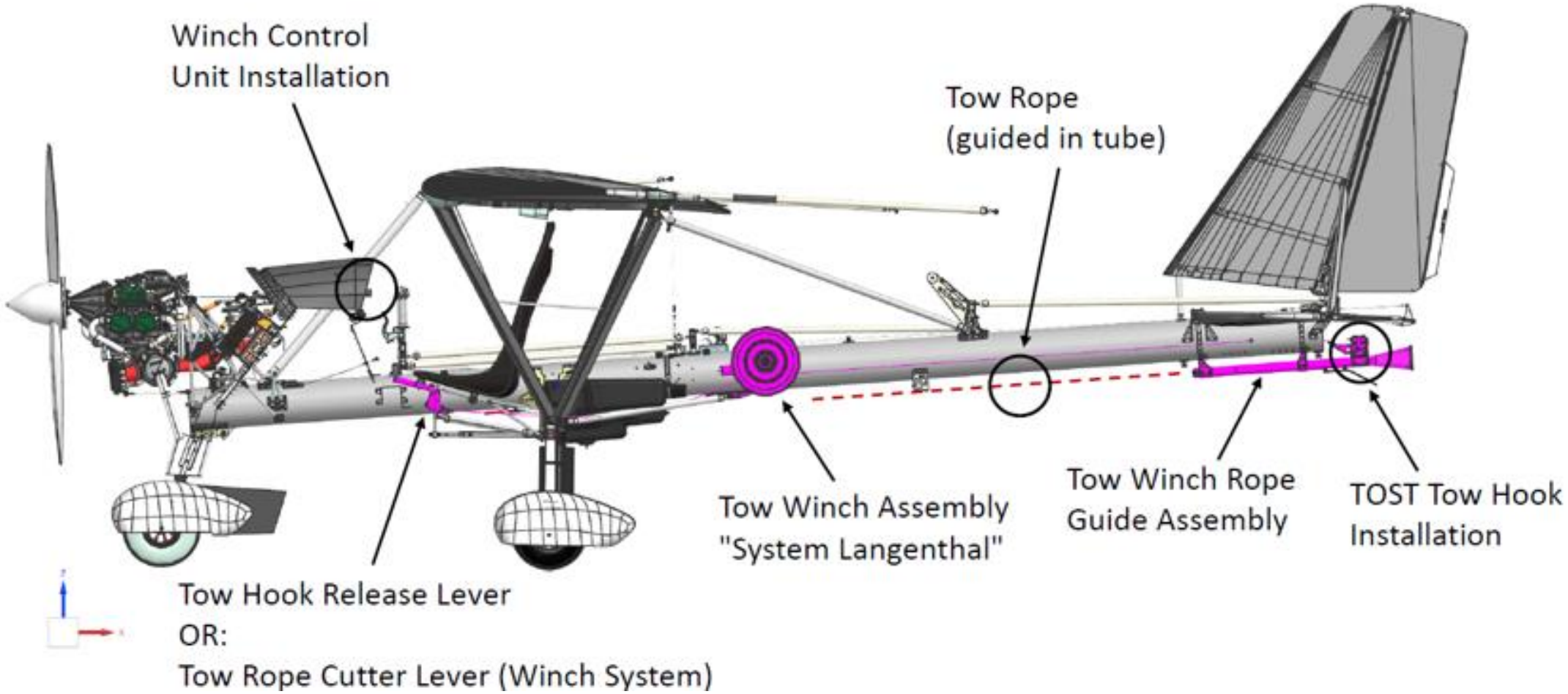

Rope retraction

Winch system

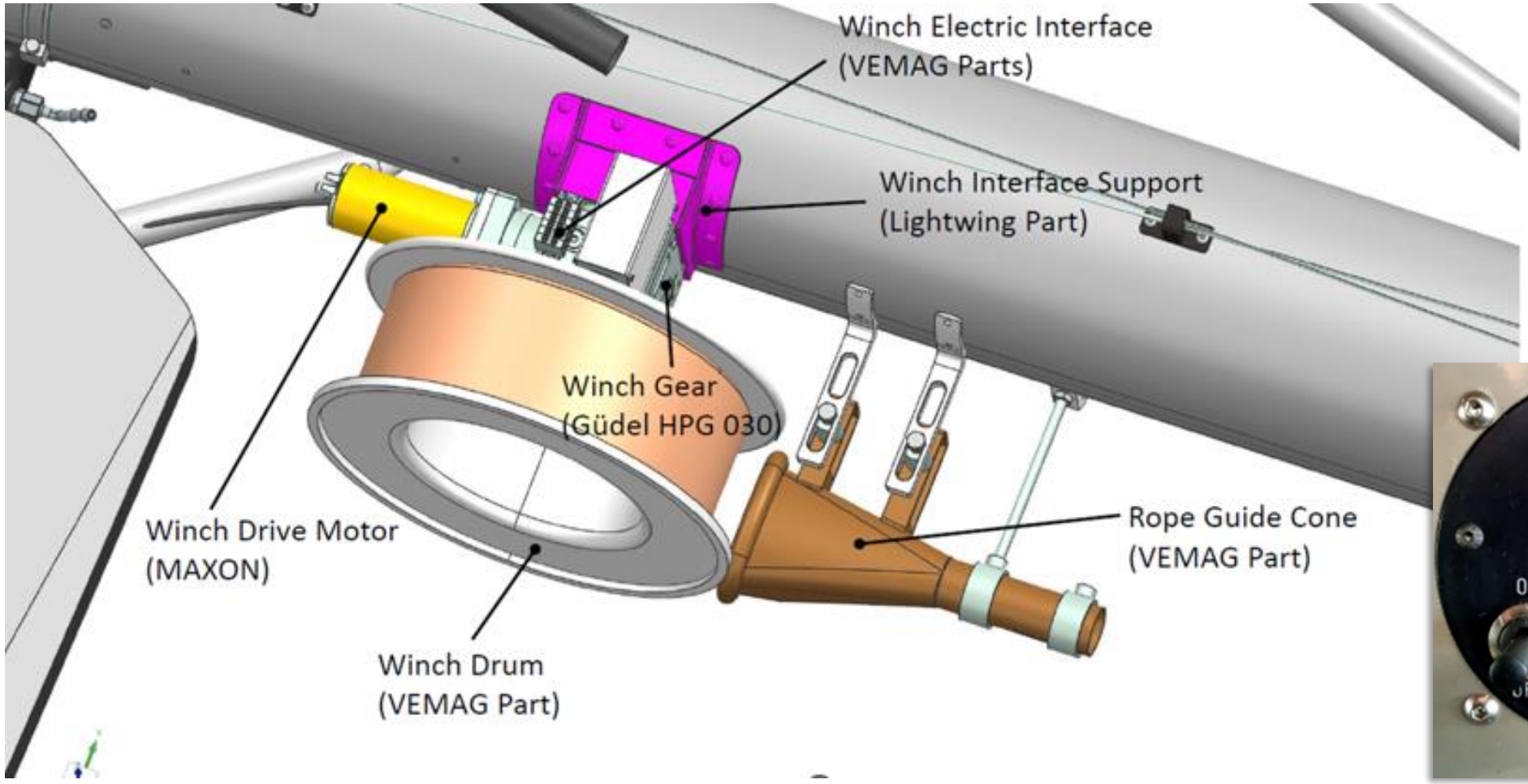

Winch system

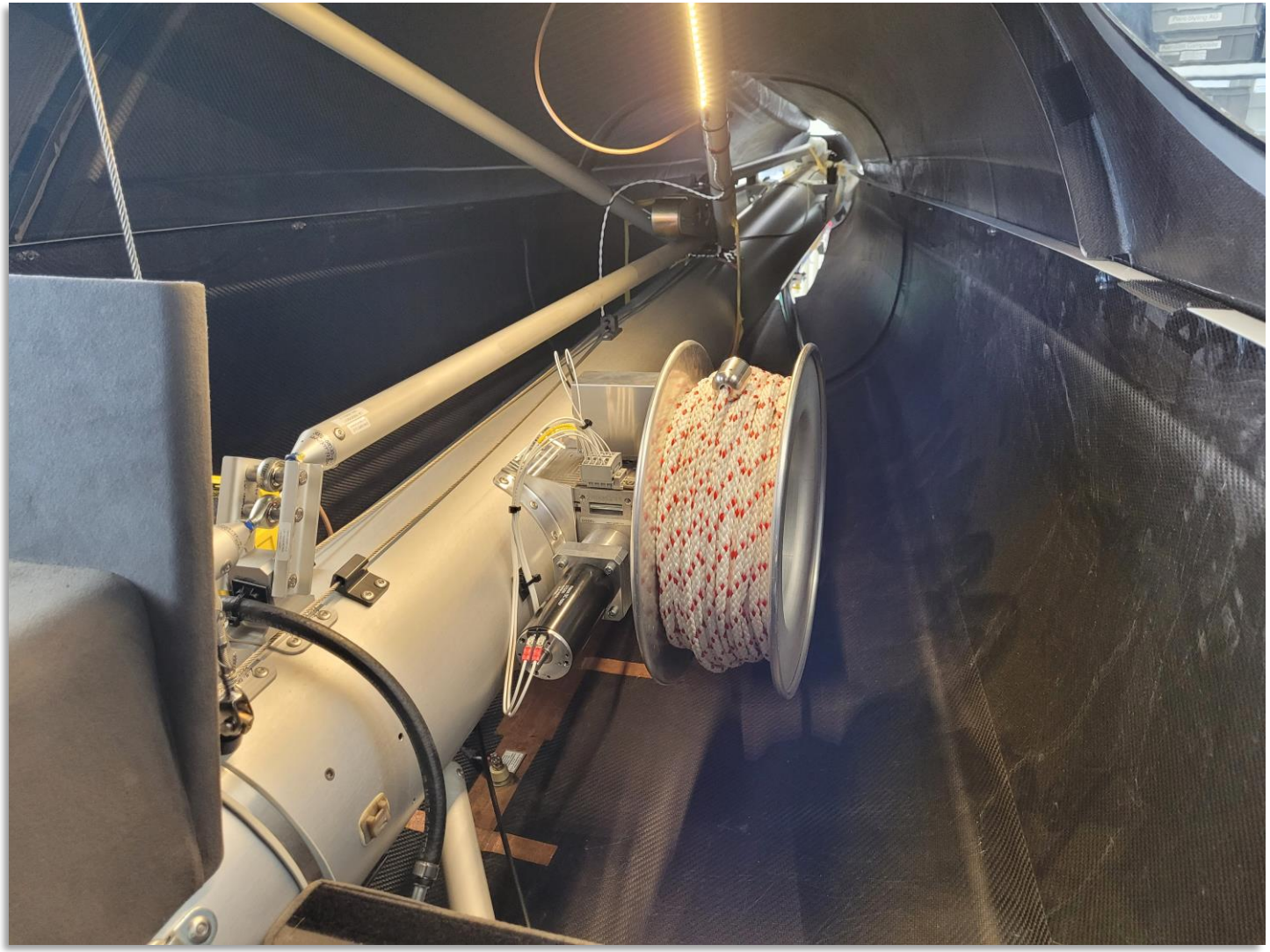

Rear view with camera

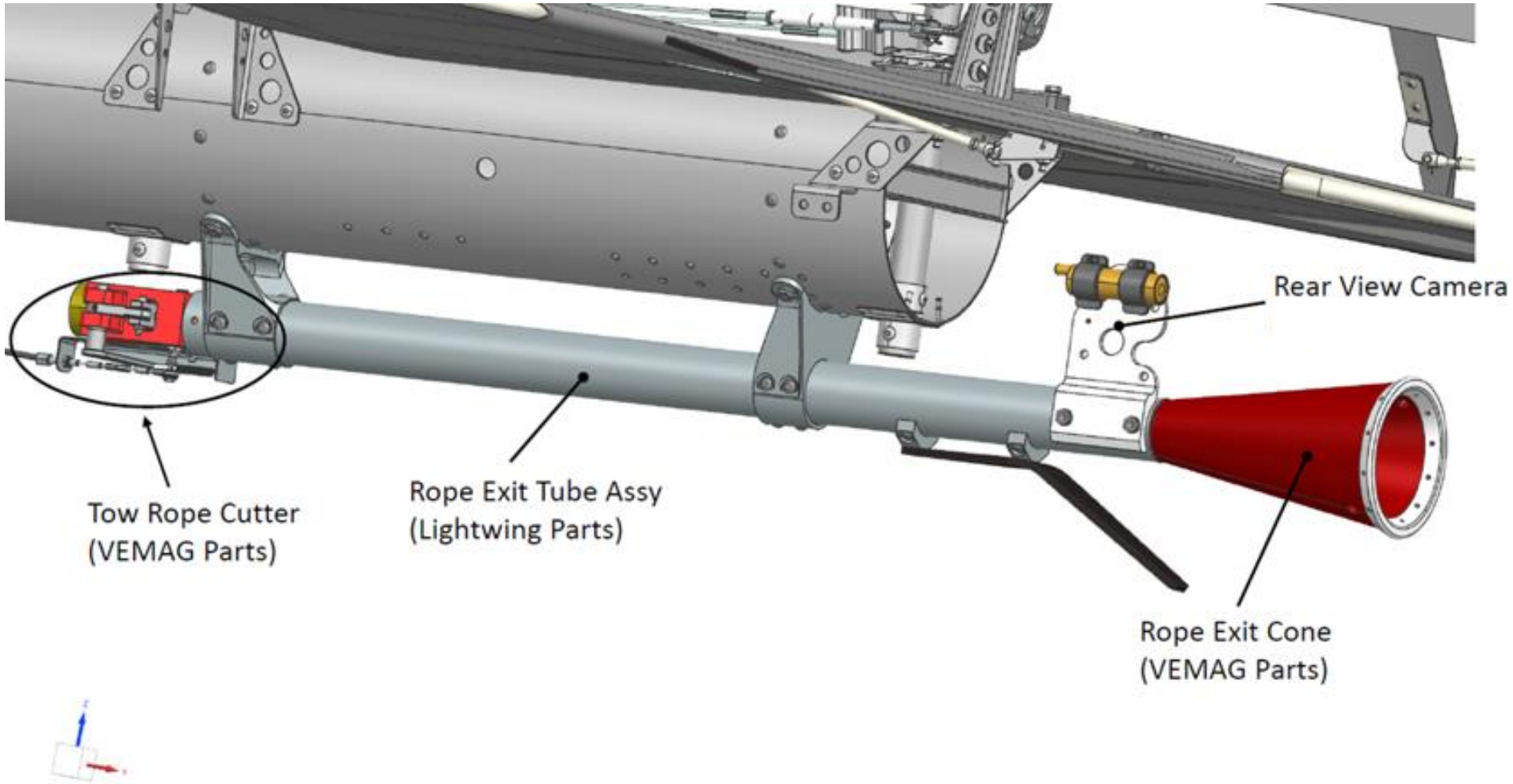

Rear camera

LIGHTWING
AIRCRAFT

		Metric	Standard
Stallspeed FLAP DWN	V_{S0}	76 km/h	41 kts
Stallspeed Flap 0°		82 km/h	44 kts
Take off ground roll distance		< 111 m	< 364 ft
Take off distance to clear obstacle		15 m < 235 m	50 ft < 770 ft
Rate of climb MTOW		~ 9 m/s	~ 1800 ft/min
Cruise speed		~ 210 km/h	~ 113 kts
Cruise speed max.		> 197 km/h	> 106 kts
Never exceed speed	V_{NE}	> 210 km/h	> 113 kts
Demonstrated X-Wind		18.5 km/h	10 kts
Fuel consumption		25 l/h	6.6 gal/h
Tank (usable)		90 l	24 gal
Endurance		3:40 h	3:40 h
Wing span		9.57 m	32 ft
Total length		6.95 m	22 ft 9.8 in
Maximum height		2.67 m	8 ft 9 in
Cabin width		1.26 m	49.6 in
Luggage volume		550 Liter	19.4 ft^3
Luggage weight		2 x 25 kg	2 x 55 lbs
Tire front wheel		4.00-6"	4.00-6"
Tire main wheel		15x6.00-6"	15x6.00-6"
Noise		<65.9 dB(A)	<65.9 dB(A)

Glider Tow Performance

Comparison

(Glider in tow = 600 kg)	Power	Climb	V_y	V_{FE}	Roll Dist.	TO Dist.	Consumption	Noise	Cost	Prop-GND
	PS	m/s	km/h	km/h	m	m	l/h	dB(A)	Fr./min	cm
Lightwing AC4 GT *	**141**	**3.5**	**125**	**165**	**206**	**326**	**30**	**60**	**5.00**	**33**
Robin DR400	180	2.6	140	170	310	492	45	70	7.50	31
Dynamic WT9 R914	115	2.5	127	140	*310*	*492*	21	62	7.50	
Super Dimona *	115	2.3	110	150	381	608	25	70	6.60	26
MCR01 *	115	2.5	120	140	309	490	25	60	7.50	21
Husky A1-C	180	2.4	119	130	300	495	45	68	6.50	30

all data from AFMs, Tests and Simulation, 1'000 ft altitude
** Turbo*

Safe flying fun